manual

panel saw

nova si 400

High construction quality for reliability and safe performance.

SAW UNIT: A PERFECT CUT
Maximum torsional rigidity and the total absence of vibration through the closed loop structure of the saw unit which ensures **perfect alignment of the blades** during tilted and difficult cuts.

MANUAL MOVEMENTS: ALWAYS USER FRIENDLY AND PRECISE
Ease of use in every day operation due to the dedicated gear box, fully protected from dust (Scm solution), that provides a **smooth and direct transmission.** Every minimum handwheel movement corresponds to a **precise blade adjustment.**

MANUAL ADJUSTMENT OF THE SCORING UNIT: SIMPLE AND EFFECTIVE
Vertical and horizontal adjustments are carried out by user-friendly mechanical levers that operate directly making **precise and smooth movements.** The useful mechanical stops allows immediately finding of the set position. The positioning of the controls allows their use without moving from the front of the machine.

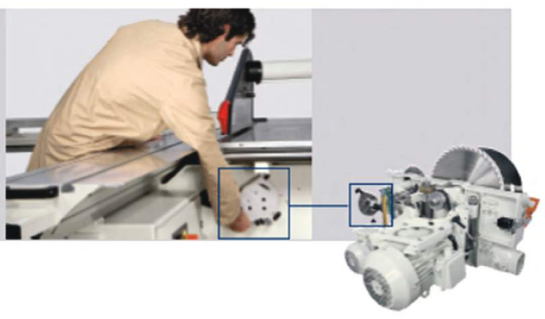

SLIDING CARRIAGE: MAXIMUM CUT QUALITY GUARANTEED OVER TIME
The carriage will never require adjustment due to its structure with arch-ground steel slideways (Scm solution) so it can **carry loads four times higher than others.**
class

"ARC" PROFILE: FOR EXCELLENCE IN MACHINING
- No play and no need for adjustments over time
- Higher loading capacity
- +/-0,05 mm tolerance on the entire carriage length for straight and high quality cutting.

The horizontal positioning of the guides ensures **protection from dust** therefore improving the sliding of the carriage.

SLIDING CARRIAGE: SMOOTH SLIDING AND A SOLID WORK SURFACE
The wide section of the carriage, with closed reticular geometry, provides extreme rigidity and minimum deflection. **A smooth operating motion is guaranteed over time** by the system of sliding bearings running on hardened steel guides using an exclusive method of mechanical fixing. *nova*

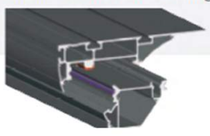

Mechanical preset for "DADO" machining
Possibility of using a tool (not included) to replace the main blade, with 203 mm maximum diameter and 20 mm maximum thickness.

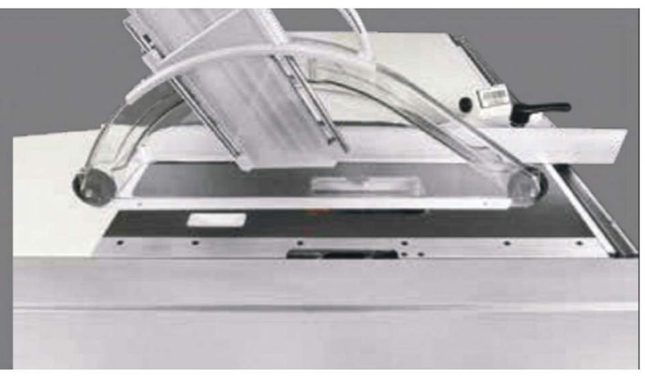

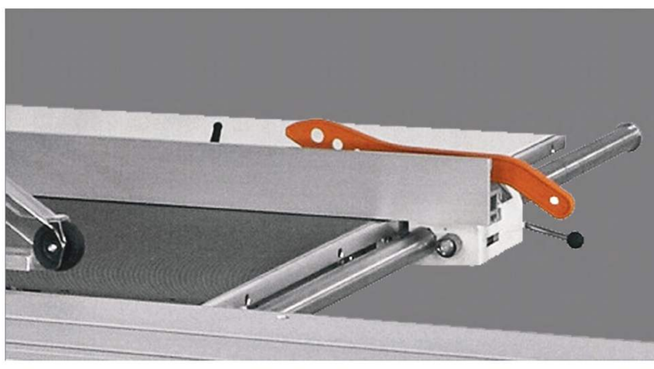

Rip fence
Sliding of the rip fence support on round bar with micrometric adjustment.
The fence can be easily excluded from the working area when it isn't used.

panel saw		Nova
		SI 400
Squaring capacity	mm	3200x3200
Cutting width on rip fence	mm	1300
Max. saw blade diameter	mm	400x30
Cast-iron saw table dimensions	mm	1040 x 630
scoring blade diameter	mm	120x20
Max. saw blade projection from the table at 90°/45°	mm	140/97
Main saw motor	kW(hp)	5.5 (7.5) 50 Hz
Saw blade rotating speed	rpm	3000/4000/5000
Scoring saw	kW(hp)	.75 (1) 50Hz
Scoring saw roation speed	rpm	8500
Exhaust outlet diameter at base	mm	120
Exhaust outlet diameter on overhead protection	mm	80
Exhaust outlet diameter on riving knife	mm	60
Extraction air flow rate to 20 m/sec	m3/h	1176
Weight of machine	kg	850

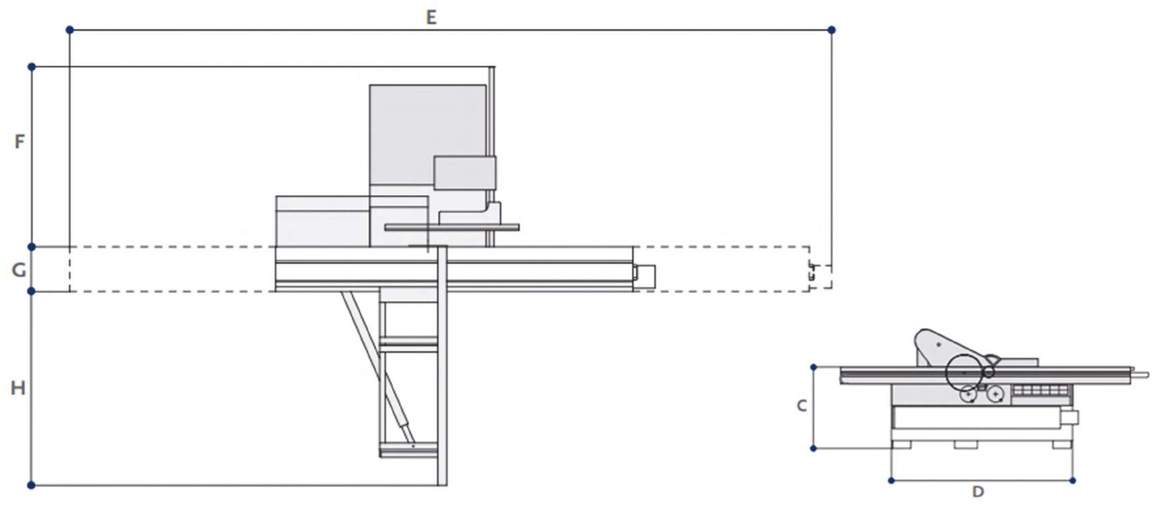

panel saw		Nova
		SI 400
C	mm	900
D	mm	1800
E 3200 carriage	mm	7100
F 1300 rip fence	mm	5155
G	mm	360
H	mm	1960

The motors powers in this catalogue are expressed in S6
We reserve the right to modify technical specifications without prior notice,